Development of a Heat Generator – Kettle System for Boiling Processes

R. Metzler

Fachhochschule Furtwangen, Postfach 28,
D-7743 Furtwangen, F.R.G.

ABSTRACT

This article represents an excerpt from a report on the development of a heat generator, a device to convert mechanical energy from a water turbine directly into heat, at a temperature level suitable for processes such as drying, boiling, distilling or even baking. Where heat is required, a heat generator can be used. Such a heating system is easy to build and maintain, and the system requires less investment than producing electricity first and changing it into heat through resistors. In particular, this article describes a system which is capable of producing heat at temperatures high enough for a boiling processes. The economic feasibility, the design principles and the performance of the system are discussed. Finally areas for future development are suggested.

INTRODUCTION

Power from small mountain rivers could well help to ease the pressure or the scarce supply of firewood in rural areas. The issues relating to the development of sites for hydropower and appropriate turbines and generators have been widely discussed.[1,2,3] However, very little consideration has been given to the productive end-use of the power developed. As a result, well-built hydropower plants are inadequately used, and sometimes plants produce electricity where perhaps only mechanical power or heat is required. There are a few projects which have taken this problem into account, and which have tried to develop hydropower from the user's point of view.[2,3,4,5]

For several years, a number of hydropower projects have been carried out in Nepal with this consideration in mind.[5] One result of these efforts has been the development of a heat generator (HG). This is basically a fluid brake which converts the mechanical energy of a turbine directly into heat. In 1979, the first tests began, and by 1981 two pilot plants were installed – one for drying ginger and the other for drying fruits and vegetables. Both HG plants were only used to dry foodstuffs using air heated to 60°C or less. In order to apply the HG principle to processes which needed higher temperatures, more work was needed.

This study describes the development of heat generators, and in particular describes an HG-kettle system which is capable of producing heat at temperatures high enough for boiling processes. The basic components of the system that are ready for assembly are shown in Fig. 1: HG

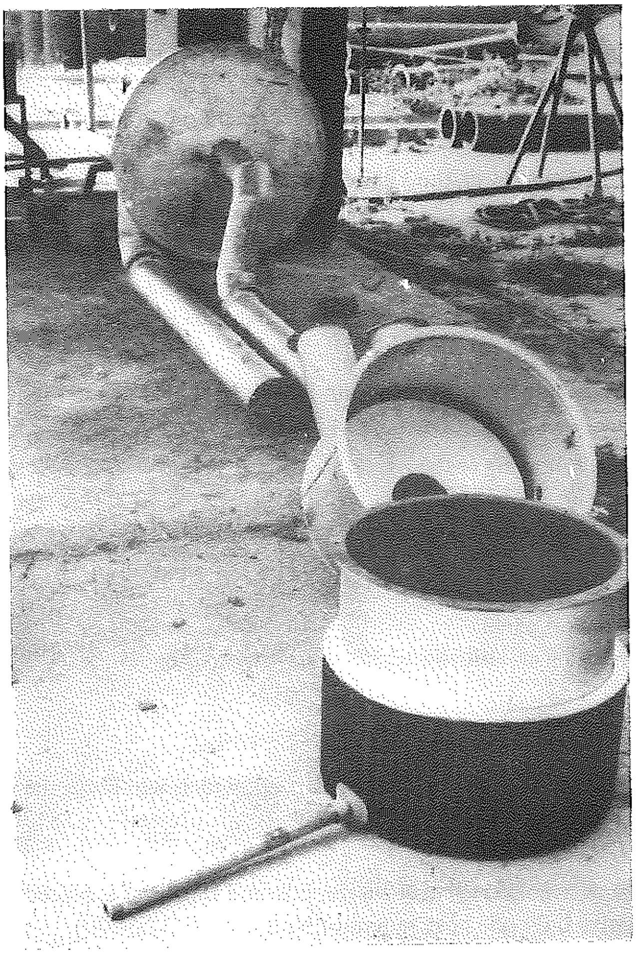

Fig. 1 Parts ready for final assembly

(1), air ducts (2) and a kettle with fins for sufficient heat transfer surface (3), and the kettle housing (4). A comparison between the costs of electrical and mechanical heat generation is made in Section 2 below. Section 3 discusses the economic feasibility of the heat generator/turbine approach by comparing it with other available heat energy sources. Section 4 explains the reason for choosing air as the heat transfer medium of the specific system. Section 5 outlines the design principle of the HG and the kettle. Section 6 deals with the performance aspect of the system, and finally Section 7 suggests some areas for future development.

COMPARISON OF ELECTRICAL AND MECHANICAL HEAT GENERATION

At first glance, it seems obvious to convert waterpower into electricity for heating. A closer look, however, reveals that electricity is in many instances not appropriate at all.

In most places in the hills of Nepal, electricity is not known at all. Therefore skilled manpower for repairs and maintainance of electrical gadgets is not available. Maintaining a power plant becomes very difficult, especially if it involves electronics, as is the case with, for example, the voltage control of most commercially available generators. The main advantage of electricity is to be able to conduct it to wherever it is needed. Of course, it is useful to have a mill or village processing center in the middle of the village, but it is expensive. The most decisive factor in this connection is capital investment. The following two examples give an idea of the price difference between direct heat generation and heating with electricity in Nepal:

- The energy from an existing turbine (25 kW output) is converted first into electricity, then into heat through heating elements and into kinetic energy through a fan, so that the heat can be used for drying.
- The energy is converted directly into hot air by a heat generator and blown into a dryer close to the turbine.

This involves the following costs:

a)

Equipment	Cost (US$)
Electrical generator	4200
Control panel	1500
Heating and blower	300
Total	6000

If the electricity is used for lighting as well, which would be the case for most villages, the additional cost would be US$7600 (transformers = US$1300; transmission line, 4 km long = US$6300).

b) If the energy is converted to heat directly and the dryer is placed close to the turbine it would involve only one heat generator with drive (= US$800).

The advantage of (a) over (b) is that (a) is independent of the location of the dryer and the system can be used to power lights. The investment for this is 7.5 times higher than for the installation which uses a heat generator. If a transmission line with transformers is needed, the cost will be 17 times higher. In very few cases this high investment can be justified. In most instances the convenience of location plays a small role, since the crop does not usually grow close to the village and has to be carried anyway. The high price of electric lights has been one of the main reasons why rural electricification projects have encountered difficulties.

Another aspect which needs to be taken into account is the efficiency of the electrical system. Supposing the following efficiencies apply: generator, 80%; transformer, 95%; transmission line, 90%; and fan and heater, 95%. In this case, there would be an overall efficiency of 60%, against 75% - 80% in direct conversion with a heat generator.

ECONOMIC FEASIBILITY OF THE SYSTEM

The economic feasibility of the system depends on the local situation and the costs of alternative heat energy sources. A calculation of the return on investment cannot be made without knowing the actual income achieved in the end-use of the heat energy generated. However, a comparison of the operating costs of generating heat energy by different methods will reveal whether it is economical to use a heat generator. Other systems producing 10 kW of useful energy are used to compare the economic feasibility of the HG system.

Electricity generated by a small turbine is excluded because of the exorbitant level of investment and the slightly higher maintenance costs involved when compared to a heat generator. The use of fuel oil, firewood, mains electricity and biogas are considered as possible alternatives.

Independent of the end-use of heat energy, labour costs may be assumed to be approximately equal in different methods of heat generation, and must therefore need not be taken into consideration. Operating costs then consist of capital interest, depreciation, maintenance costs and fuel costs where required. The total will determine the unit cost of useful energy produced if the efficiency of heat generation is taken into account. Uniform cost rates are used for capital interest, depreciation and maintenance – even though the life time and maintenance requirements may not be exactly the same for all systems. In the Nepalsese context, the following costs can be assumed:

(a) Capital interest: Loans obtainable for development activities incur 14% interest (p). With an inflation rate of 8% (a) we will get

$$\text{Real rate of interest } i = \frac{(100+p)}{(100+a)} * 100 - 100 = 5.5\%$$

(b) Depreciation: It is assumed that the working life of the equipment is 10 years, and linear depreciation is considered as being at a rate of 10%.

(c) Maintenance: Neglecting labour costs, the expenses for material and spare parts are assumed to be 3.5% of the investment per year.

Table 1 gives an approximate estimate of the fixed costs (fc) and variable costs (vc) for different heat generating systems based on data obtained in Nepal.[6,7,8] Taking 1000 operating hours per year, equivalent to the turbine driven heat generator system capacity running at 10 kW for 4 hours per day, unit costs are provided based on a yearly production rate of 10 000 kWh low/medium temperature end-use energy.

From Table 1 we can conclude that, where the potential exists, the heat generator system gives the best economic performance under the circumstances considered in Nepal.[9]

CHOICE OF THE HEAT TRANSFER MEDIUM

This mainly depends on the type of end-use of the heat produced. Table 2 gives some of the advantages and disadvantages of various heat transfer mediums:

The first application of the heat generator for a boiling process was for soap and paper making. It involved an 80 L kettle to contain the soap or pulp. The paper-making process involves both boiling and drying, and therefore a solution was looked for where both applications would be possible.

Air seemed to be the right transporting medium for these applications. The difficulty in using air was to overcome the problems resulting from the low heat transfer coefficient of air. A

Table 1. Cost comparison of different heat energy systems: operating costs for 10 000 kWh end-use energy

Energy system	Investment costs [$]	Fixed costs fc		Fuel heat value [kcal]	Efficiency [%]	Quantity of fuel	Fuel unit price [US$]	Variable costs [US$]	Total operating costs [US$/yr]	Costs per unit [¢/kWh]	Ranking
		[%]	[$/yr.]								
	r			q	η	Q	fp	vc	yc	c	
Turbine/ heat generator	2900	19	551	–	75	–	–	–	551	5.5	1
Fuel oil	1200	19	228	8000/L	50	2150 L	0.45/L	967	1195	11.9	5
Firewood	200	19	38	3000/kg	20	14330 kg	0.05/kg	716	754	7.5	3
Mains electricity	300	19	57	–	70	14286 kWh	0.07/kWh	1000	1057	10.6	4
Biogas	3600	19	684	4700/m^3	60	3050 m^3	–	–	684	6.8	2

Table 2. Advantages and disadvantages of various heat transfer mediums

Medium	Advantages	Disadvantages
Air	No cost; small sealing problems; high temperatures possible.	Low specific weight; low heat transfer coefficient makes equipment bulky.
Water	Low cost; high specific weight; high heat transfer coefficient.	Low boiling point; for temperatures > 80°C pressurisation necessary; water treatment important; corrosion problems.
Thermo-oil	High boiling point; no need for pressurisation; high specific weight and heat transfer coefficient.	High cost; oxidation problem, therefore closed system needed; thermal expansion; sealing problems.

heat generator churning water or oil seemed to be too difficult to seal and too expensive and complicated. This led to the decision to use air as the transporting medium. The system developed in this study utilizes a specially designed kettle, where the air has enough contact area to transfer its heat.

SYSTEM DESIGN

Design principle of the HG:

The HG, which is basically a fluid brake, uses air as the heat transfer medium, and is in principle a fan with a housing in which baffles create eddies, thereby heating the air by friction. Figure 2 shows the basic layout of the HG.

Air is drawn in by the runner (1) through the inlet (2), and part of it leaves the housing through the outlet pipe (3), while the rest circulates over the baffles (4). The amount of air drawn in by the rotor and the temperature generated depends mainly on the position of the valve (5). When it is in closed position, the generator acts as a fan blowing air at close to ambient temperature. If the valve is fully open (shifted to the extreme right), nearly all the air leaving the fan is drawn over the baffles (4), thereby causing eddies and creating a maximum heat of about 200°C. Between those two extremes, all temperatures can be obtained by adjusting the valve. As a result, the power consumed by the HG can be adjusted to the requirements of the process and to the availability of power at the turbine site during seasonal changes in waterflow by simply changing the position of the valve.

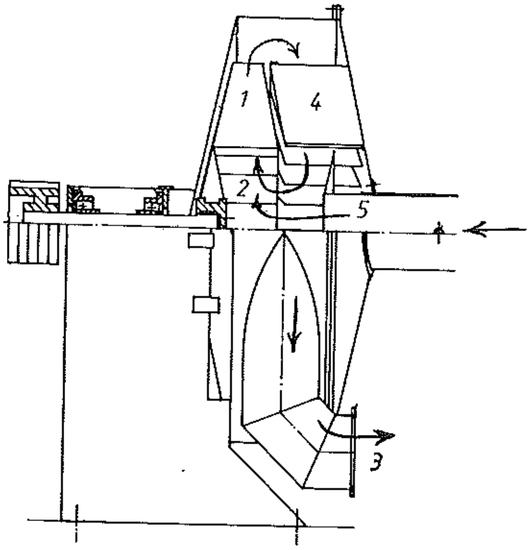

Fig. 2 The heat generator

The Kettle

The consumer of the heat produced is the kettle. It is designed to hold a volume of 80 L, with a valve at the bottom to discharge its contents. The applications of soap and paper making require that there should be no obstruction in the kettle itself, which is the reason for the fins on the outside (see Fig. 3).

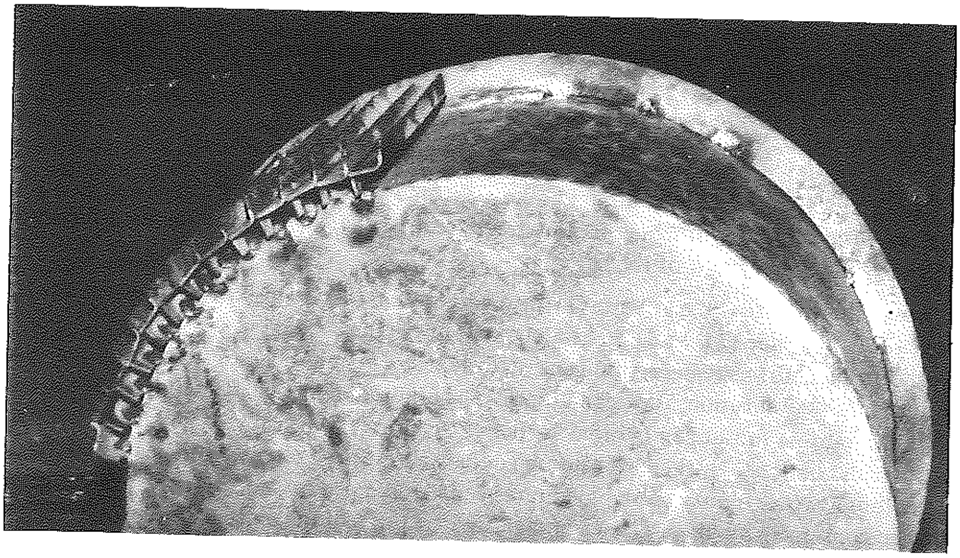

Fig. 3 Welding the fins to the kettle wall

The problem in designing the kettle is to get the heat of the air into the liquid fast enough. The following formula describes the factors involved in this problem:

$$Q = \alpha A \Delta t \tag{1}$$

where: Q = heat flow [kcal/h]
α = heat transfer coefficient [kcal/(h °C m^2)]
A = surface of heat transfer [m^2]
Δt = temperature difference [°C]

According to this formula, there are three factors involved which influence heat transfer:

(1) α: This coefficient is dependent on the medium and its velocity. If air passes the kettle wall very fast, α is high and the transfer rate will also be high. In our case the relation is:

$$\alpha = 6.14\ V^{0.78} \tag{2}$$

where: V = air velocity [m/s]

This means that α is almost proportional to the air velocity, i.e. the velocity should be kept at a maximum.

The value of α for air to the steel wall is roughly 60 to 80 kcal/(h °C m^2), with air velocities between 20 m/s and 25 m/s. The value for the transfer from the wall into the liquid is about 2000 kcal/(h °C m^2), which means that the limiting factor is the transfer from the air to the wall of the kettle.

(2) Surface: Heat transfer is proportional to the surface the air is in contact with. Therefore the surface of the outside wall is increased by fins to make up for the lower α on this side of the transfer.

(3) Temperature difference: Since the temperature of the liquid is fixed at boiling point, it can be said that the higher the temperature of the air the higher the heat flow.

In order to make use of these heat transfer features in the kettle fins were welded to the outside wall of the kettle in such a way that the surface of the fins is maximised but the cross-section for the air to flow through is minimised in order to keep the air velocity high. As the distance between the fins decreases, the pressure loss over the fins, and the manufacturing costs, increase. This sets a limit to attempts to enlarge the contact area. The result of computer-aided optimisation are the Z-shaped fins. Fin and kettle sizes are chosen carefully and cannot be changed without influencing the efficiency of the whole system.

SYSTEM PERFORMANCE

(a) HG

Since the heat generator is basically a blower, the relation which is applicable to the fan design applies here as well, namely.

$$P = c\ N^3 D^5 \tag{3}$$

where: P = power to run machine
c = a constant
N = rotational speed
D = outside diameter of the runner

From (3), it will be observed that even small changes in the runner diameter will change the driving power very rapidly. To obtain smaller driving power it is more advantageous to lower the already quite high rotational speed. This reduces problems caused by vibration and noise. It is also important to keep the step-up ratio between the turbine and the machine as small as possible, which again requires lower rotational speeds.

The above formula is only correct as long as the air in the generator remains at the same temperature. With an increase in temperature, the specific weight of the air decreases, the air becomes "lighter", and the power necessary to move it becomes smaller.

(b) HG and kettle coupling

If connected, the heat generator and kettle influence each other. It is important to understand this relation when talking about temperatures. For a given speed, the genertor takes a certain amount of power. This energy changes into heat and kinetic energy, and can leave the generator only as a combination of air temperature and velocity. The rate at which this heat energy will be transferred into the liquid of the kettle depends largely on the air temperature. As long as there is less heat transferred than produced by the heat generator, the temperature will rise until the heat consumed by the kettle is equal to the heat produced. This means at the same time that a higher power input into the heat generator requires a higher temperature level of the air, resulting in a higher heat transfer into the kettle.

(c) Regulation of the heat production

The only measure required to adapt the HG input to the turbine size, is the selection of the proper pulley diameters, since the driving power is a function of the operating speed (Fig. 4). For example, if a turbine delivers 9 kW the pulley ratio has to be such that the HG turns at 1700 rpm to consume this power. Once the pulley ratio is fixed, the power consumed can still be adjusted with the value, in the limits of the two curves of the diagram. The power will increase the more the valve is moved towards the closed position. In this example the power can be reduced down to 3.4 kW with the valve fully closed. Hence the heat produced can be adjusted easily without changing the operating speed.

(d) Efficiency of the system

This depends mainly on two factors: the quality of the insulation against heat losses, and how airtight the system is. The system tested in this study was insulated with 50 mm mineral wool, and this resulted in an overall efficiency of 76%. Of course any type of insulation can be used, as long as it can stand temperatures of 250°C. In this connection it is important to note that the temperature will rise considerably when there is no liquid in the kettle. When using organic insulation, this fact has to be considered.

The system has airtight ducts. The only air leak is where the shaft of the runner enters the

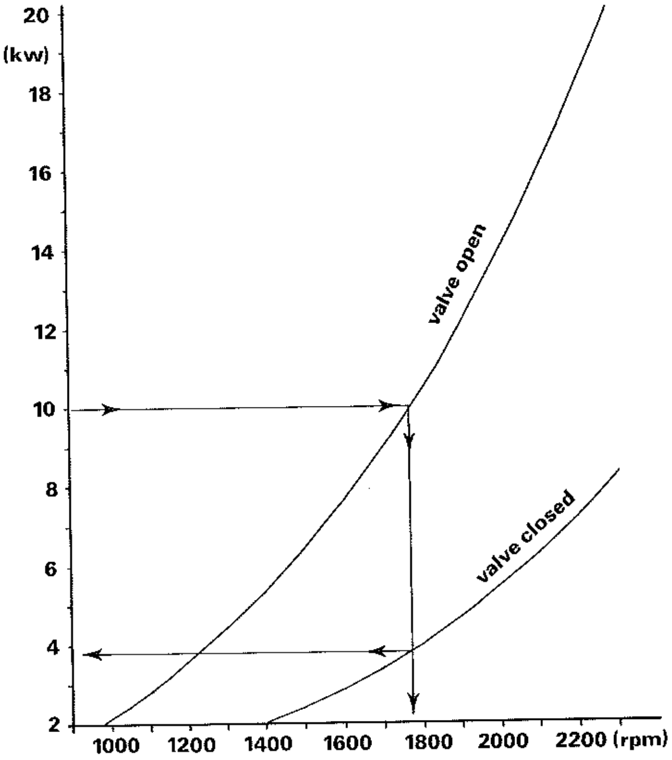

Fig. 4 Performance of heat generator-kettle system

housing. However, this leakage was found to be insignificant. Airtight joints and ducts have a significant influence on efficiency. This can be explained by the fact that air of 200°C has a relatively high heat value compared to air at ambient temperature. Thus even small losses of air through leaks result in a significant drop in efficiency.

FINAL REMARKS

After experience in using the system, it was found that this design appears to be suitable for most applications. One disadvantage is that the shape of the kettle cannot be chosen freely, since for the system to be economical the necessary fins have to be welded to a straight wall. This is a disadvantage in applying the heat generator to processes where the shape of the kettle cannot easily be changed. For example, in distilleries and cheese dairies a spherical-shaped copper vat is used. An appropriate solution seems to be to incorporate a steam boiler into the housing of the heat generator, and convey the steam in heating pipes to the vessel to be heated.

Another area of future development is steam production for processes like the parboiling of rice, the steaming of seeds prior to pressing, and other food processing where steam is needed directly. Parallel to steam production, it is possible to store small heat quantities in the form of pressurized water. In this way, the heat generator could store energy in small amounts as and when the turbine is not utilized for other purposes.

REFERENCES

1. *Nepal, The Energy Sector* (1976), Energy Research and Development Group, Institute of Science, Tribhuvan University, Kathmandu.
2. Meier, U. (1981), *Local Experience with Micro-Hydro Technology,* Swiss Center for Appropriate Technology, St. Gall.
3. Inversin, A.R. (1981), *A Case Study: Micro-Hydropower Schemes in Pakistan,* National Rural Electric Cooperative Association, Washington, 38p.
4. Guerrero, J.L. (1982), A Viewpoint about Small Water Power Developments, paper presented at the *Regional Workshop on Small Hydropower in Africa,* Abidjan, Ivory Cost, 7 p.
5. Inversin, A.R. (1982), *Nepal: Private-Sector Approach to Implementing Micro-Hydropower Schemes; A Case Study,* National Rural Electric Cooperative Association, Washington, 26 p.
6. Meier, U. (1982), *Technical Report on the Water Turbine Component,* Asian Development Bank, Manila.
7. Renewable Energy Resources in Nepal, *Proceedings of the Workshop Seminar,* Kathmandu, 1-4 April 1981, Research Center for Applied Science & Technology, Tribhuvan University, 277 p.
8. Meier, U. (1982), *Technical Report on the Biogas Component,* Asian Development Bank, Manila.
9. Metzler, R. (1983), *The heat generator,* Swiss Center for Appropriate Technology, St. Gall.